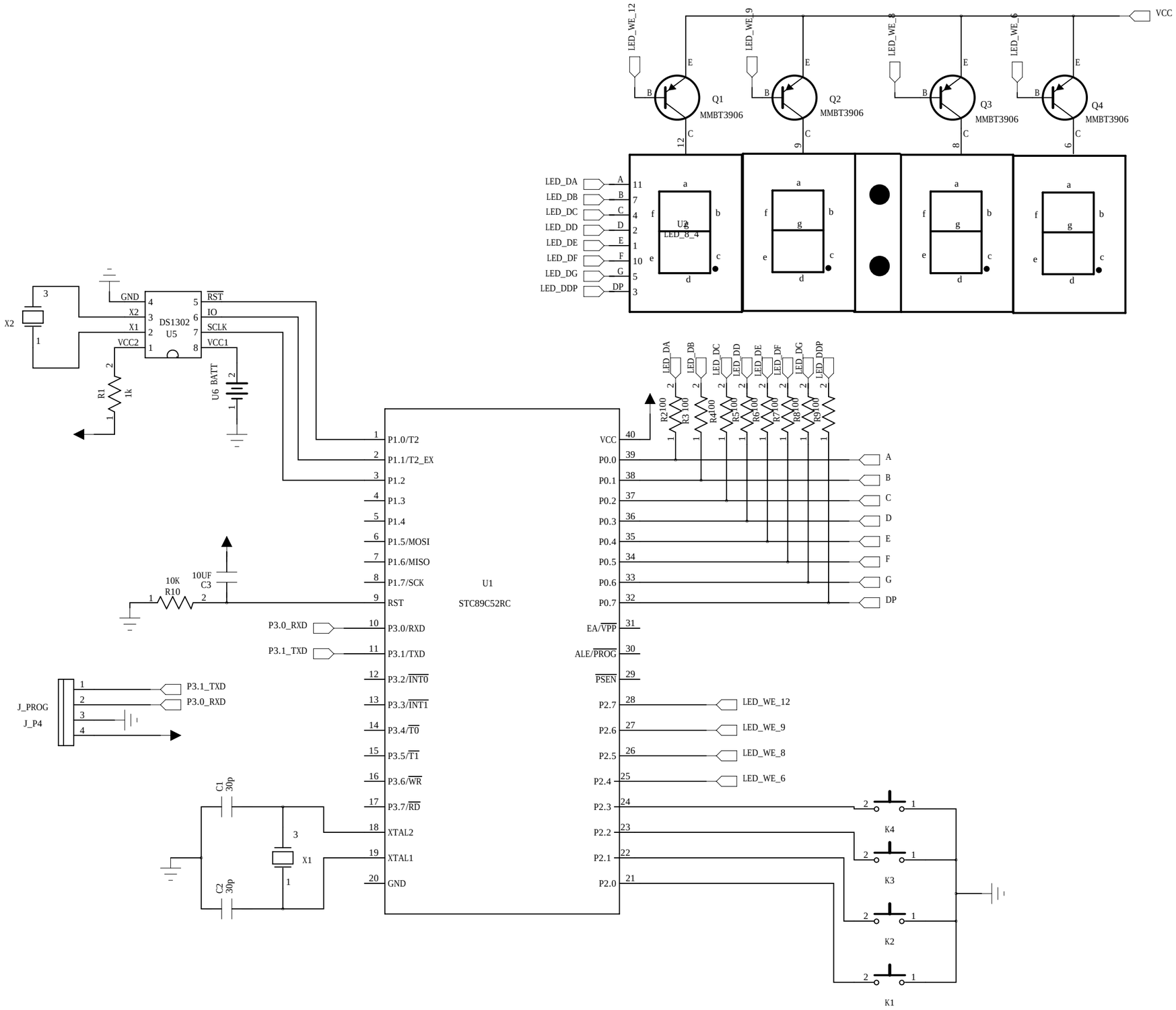
VCC
LED_WE_12
LED_WE_9
LED_WE_8
LED_WE_6
Q1 MMBT3906
Q2 MMBT3906
Q3 MMBT3906
Q4 MMBT3906
LED_DA
LED_DB
LED_DC
LED_DD
LED_DE
LED_DF
LED_DG
LED_DDP
U2 LED_8_4
X2
DS1302 U5
GND
X2
X1
VCC2
RST
IO
SCLK
VCC1
R1 1k
U6 BATT
R2 100
R3 100
R4 100
R5 100
R6 100
R7 100
R8 100
R9 100
U1 STC89C52RC
P1.0/T2
P1.1/T2_EX
P1.2
P1.3
P1.4
P1.5/MOSI
P1.6/MISO
P1.7/SCK
RST
P3.0/RXD
P3.1/TXD
P3.2/INT0
P3.3/INT1
P3.4/T0
P3.5/T1
P3.6/WR
P3.7/RD
XTAL2
XTAL1
GND
VCC
P0.0
P0.1
P0.2
P0.3
P0.4
P0.5
P0.6
P0.7
EA/VPP
ALE/PROG
PSEN
P2.7
P2.6
P2.5
P2.4
P2.3
P2.2
P2.1
P2.0
10K R10
10UF C3
P3.0_RXD
P3.1_TXD
J_PROG J_P4
C1 30p
C2 30p
X1
K4
K3
K2
K1